Specifications

Dimensions in inches. Refer to installation/owner's manual for detailed specifications on installing this product. Hearth & Home Technologies reserves the right to update units periodically. Product installation must adhere strictly to instructions shipped with product.

Model	Front Width		Back Width		Height		Depth		Glass Size	BTU/Hour Input
	Unit	Framing	Unit	Framing	Unit	Framing	Unit	Framing		
LCOR-36TRB RCOR-36TRB	40-1/2	40	40-1/2	40	38	38-1/8	24-1/2	24	36 x 24-1/2	26,000-37,000

Specification Details

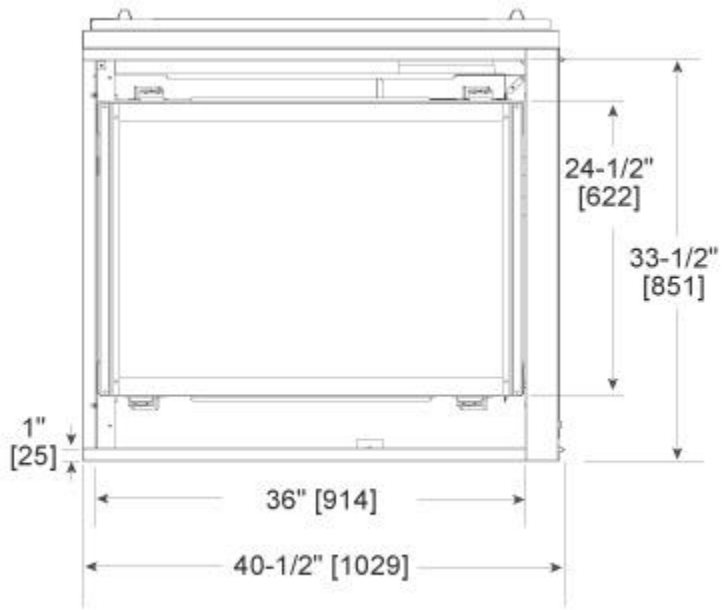

Efficiencies			
Model	Steady State	AFUE	Canada EnerGuide
LCOR/RCOR-36TRB	72%	59%	61%

Btus will vary depending on the type of fuel used. The flame and ember appearance may vary based on the type of fuel burned and the venting configuration used. Actual product appearance, including flame may differ from image shown. Refer to the Owner's Manual for complete clearance requirements and specifications. Product specifications and pricing subject to change without notice. For testing and listing information please refer to the owners/installation manual.
*For select products: Heating capacity represents a well-insulated home with low ceilings in a mild climate.

Heating capacity (in square footage) is a guideline only and may differ slightly due to climate, building construction and condition, amount and quality of insulation, location of the heater, and air movement in the room.